FAIRCHILD SEMICONDUCTOR™

May 1995
Revised February 2001

74LCX157
Low Voltage Quad 2-Input Multiplexer with 5V Tolerant Inputs

General Description

The LCX157 is a high-speed quad 2-input multiplexer. Four bits of data from two sources can be selected using the common Select and Enable inputs. The four outputs present the selected data in the true (noninverted) form. The LCX157 can also be used as a function generator.

The 74LCX157 is fabricated with advanced CMOS technology to achieve high speed operation while maintaining CMOS low power dissipation.

Features

- 5V tolerant inputs
- 2.3V–3.6V V_{CC} specifications provided
- 5.8 ns t_{PD} max (V_{CC} = 3.3V), 10 µA I_{CC} max
- Power down high impedance inputs and outputs
- ±24 mA output drive (V_{CC} = 3.0V)
- Implements patented noise/EMI reduction circuitry
- Latch-up performance exceeds 500 mA
- ESD performance:
  - Human body model > 2000V
  - Machine model > 200V

Ordering Code:

Order Number	Package Number	Package Description
74LCX157M	M16A	16-Lead Small Outline Integrated Circuit (SOIC), JEDEC MS-012, 0.150 Narrow
74LCX157SJ	M16D	16-Lead Small Outline Package (SOP), EIAJ TYPE II, 5.3mm Wide
74LCX157MTC	MTC16	16-Lead Thin Shrink Small Outline Package (TSSOP), JEDEC MO-153, 4.4mm Wide

Devices also available in Tape and Reel. Specify by appending the suffix letter "X" to the ordering code.

Logic Symbols

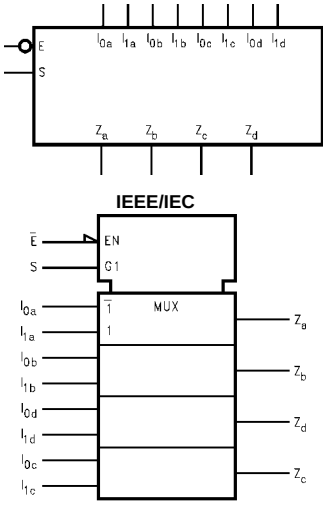

Connection Diagram

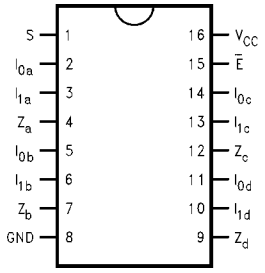

Pin Descriptions

Pin Names	Description
I_{0a}–I_{0d}	Source 0 Data Inputs
I_{1a}–I_{1d}	Source 1 Data Inputs
$\overline{E}$	Enable Input
S	Select Input
Z_a–Z_d	Outputs

© 2001 Fairchild Semiconductor Corporation

Functional Description

The LCX157 is a quad 2-input multiplexer. It selects four bits of data from two sources under the control of a common Select input (S). The Enable input ($\overline{E}$) is active-LOW. When $\overline{E}$ is HIGH, all of the outputs (Z) are forced LOW regardless of all other inputs. The LCX157 is the logic implementation of a 4-pole, 2-position switch where the position of the switch is determined by the logic levels supplied to the Select input. The logic equations for the outputs are shown below:

$Z_a = \overline{E} \bullet (I_{1a} \bullet S + I_{0a} \bullet \overline{S})$

$Z_b = \overline{E} \bullet (I_{1b} \bullet S + I_{0b} \bullet \overline{S})$

$Z_c = \overline{E} \bullet (I_{1c} \bullet S + I_{0c} \bullet \overline{S})$

$Z_d = \overline{E} \bullet (I_{1d} \bullet S + I_{0d} \bullet \overline{S})$

A common use of the LCX157 is the moving of data from two groups of registers to four common output busses. The particular register from which the data comes is determined by the state of the Select input. A less obvious use is as a function generator. The LCX157 can generate any four of the sixteen different functions of two variables with one variable common. This is useful for implementing gating functions.

Truth Table

Inputs				Outputs
$\overline{E}$	S	I_0	I_1	Z
H	X	X	X	L
L	H	X	L	L
L	H	X	H	H
L	L	L	X	L
L	L	H	X	H

H = HIGH Voltage Level
L = LOW Voltage Level
X = Immaterial

Logic Diagram

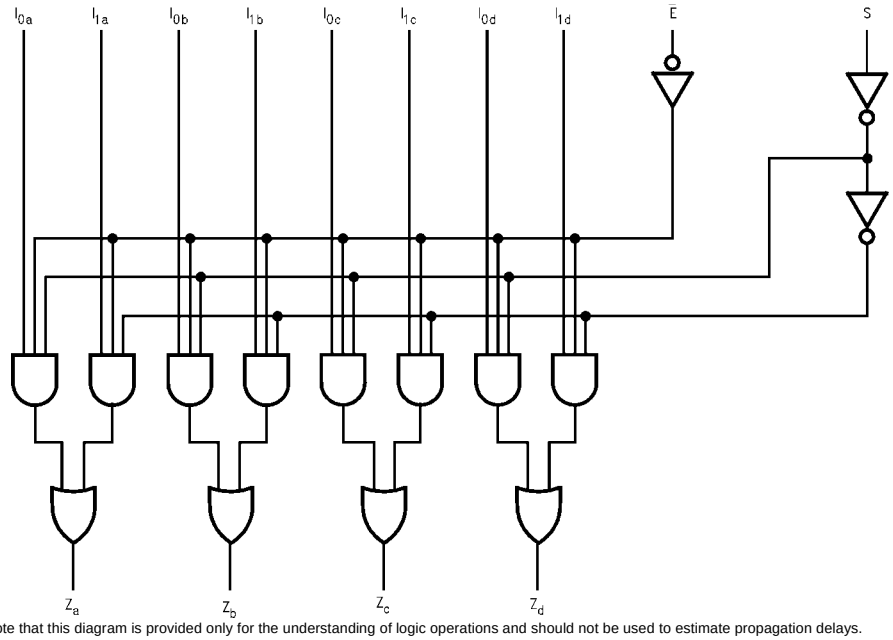

Please note that this diagram is provided only for the understanding of logic operations and should not be used to estimate propagation delays.

Absolute Maximum Ratings(Note 1)

Symbol	Parameter	Value	Conditions	Units
V_{CC}	Supply Voltage	−0.5 to +7.0		V
V_I	DC Input Voltage	−0.5 to +7.0		V
V_O	DC Output Voltage	−0.5 to V_{CC} + 0.5	Output in HIGH or LOW State (Note 2)	V
I_{IK}	DC Input Diode Current	−50	V_I < GND	mA
I_{OK}	DC Output Diode Current	−50 +50	V_O < GND V_O > V_{CC}	mA
I_O	DC Output Source/Sink Current	±50		mA
I_{CC}	DC Supply Current per Supply Pin	±100		mA
I_{GND}	DC Ground Current per Ground Pin	±100		mA
T_{STG}	Storage Temperature	−65 to +150		°C

Recommended Operating Conditions (Note 3)

Symbol	Parameter		Min	Max	Units
V_{CC}	Supply Voltage	Operating	2.0	3.6	V
		Data Retention	1.5	3.6	
V_I	Input Voltage		0	5.5	V
V_O	Output Voltage	HIGH or LOW State	0	V_{CC}	V
I_{OH}/I_{OL}	Output Current	V_{CC} = 3.0V – 3.6V		±24	mA
		V_{CC} = 2.7V – 3.0V		±12	
		V_{CC} = 2.3V – 2.7V		±8	
T_A	Free-Air Operating Temperature		−40	85	°C
$\Delta t/\Delta V$	Input Edge Rate, V_{IN} = 0.8V – 2.0V, V_{CC} = 3.0V		0	10	ns/V

Note 1: The Absolute Maximum Ratings are those values beyond which the safety of the device cannot be guaranteed. The device should not be operated at these limits. The parametric values defined in the Electrical Characteristics tables are not guaranteed at the Absolute Maximum Ratings. The "Recommended Operating Conditions" table will define the conditions for actual device operation.

Note 2: I_O Absolute Maximum Rating must be observed.

Note 3: Unused inputs must be held HIGH or LOW. They may not float.

DC Electrical Characteristics

Symbol	Parameter	Conditions	V_{CC} (V)	T_A = −40°C to +85°C		Units
				Min	Max	
V_{IH}	HIGH Level Input Voltage		2.3 – 2.7	1.7		V
			2.7 – 3.6	2.0		
V_{IL}	LOW Level Input Voltage		2.3 – 2.7		0.7	V
			2.7 – 3.6		0.8	
V_{OH}	HIGH Level Output Voltage	I_{OH} = −100 µA	2.3 – 3.6	V_{CC} – 0.2		V
		I_{OH} = −8 mA	2.3	1.8		
		I_{OH} = −12 mA	2.7	2.2		
		I_{OH} = −18 mA	3.0	2.4		
		I_{OH} = −24 mA	3.0	2.2		
V_{OL}	LOW Level Output Voltage	I_{OL} = 100 µA	2.3 – 3.6		0.2	V
		I_{OH} = 8 mA	2.3		0.6	
		I_{OL} = 12 mA	2.7		0.4	
		I_{OL} = 16 mA	3.0		0.4	
		I_{OL} = 24 mA	3.0		0.55	
I_I	Input Leakage Current	0 ≤ V_I ≤ 5.5V	2.3 – 3.6		±5.0	µA
I_{OFF}	Power-Off Leakage Current	V_I or V_O = 5.5V	0		10	µA
I_{CC}	Quiescent Supply Current	V_I = V_{CC} or GND	2.3 – 3.6		10	µA
		3.6V ≤ V_I ≤ 5.5V	2.3 – 3.6		±10	
ΔI_{CC}	Increase in I_{CC} per Input	V_{IH} = V_{CC} −0.6V	2.3 – 3.6		500	µA

AC Electrical Characteristics

Symbol	Parameter	$T_A = -40°C$ to $+85°C$, $R_L = 500\Omega$						Units
		$V_{CC} = 3.3V \pm 0.3V$		$V_{CC} = 2.7V$		$V_{CC} = 2.5V \pm 0.2V$		
		$C_L = 50$ pF		$C_L = 50$ pF		$C_L = 30$ pF		
		Min	Max	Min	Max	Min	Max	
t_{PHL}	Propagation Delay	1.5	7.0	1.5	8.0	1.5	8.4	ns
t_{PLH}	$S \rightarrow Z_n$	1.5	7.0	1.5	8.0	1.5	8.4	
t_{PHL}	Propagation Delay	1.5	7.0	1.5	8.0	1.5	8.4	ns
t_{PLH}	$\overline{E} \rightarrow Z_n$	1.5	7.0	1.5	8.0	1.5	8.4	
t_{PHL}	Propagation Delay	1.5	5.8	1.5	6.3	1.5	7.0	ns
t_{PLH}	$I_n \rightarrow Z_n$	1.5	5.8	1.5	6.3	1.5	7.0	
t_{OSHL}	Output to Output Skew		1.0					ns
t_{OSLH}	(Note 4)		1.0					

Note 4: Skew is defined as the absolute value of the difference between the actual propagation delay for any two separate outputs of the same device. The specification applies to any outputs switching in the same direction, either HIGH-to-LOW (t_{OSHL}) or LOW-to-HIGH (t_{OSLH}). Parameter guaranteed by design.

Dynamic Switching Characteristics

Symbol	Parameter	Conditions	V_{CC} (V)	$T_A = 25°C$ Typical	Units
V_{OLP}	Quiet Output Dynamic Peak V_{OL}	$C_L = 50$ pF, $V_{IH} = 3.3V$, $V_{IL} = 0V$	3.3	0.8	V
		CL= 30 pF, $V_{IH} = 2.5V$, $V_{IL} = 0V$	2.5	0.6	
V_{OLV}	Quiet Output Dynamic Valley V_{OL}	$C_L = 50$ pF, $V_{IH} = 3.3V$, $V_{IL} = 0V$	3.3	–0.8	V
		CL= 30 pF, $V_{IH} = 2.5V$, $V_{IL} = 0V$	2.5	-0.6	

Capacitance

Symbol	Parameter	Conditions	Typical	Units
C_{IN}	Input Capacitance	V_{CC} = Open, $V_I = 0V$ or V_{CC}	7	pF
C_{OUT}	Output Capacitance	$V_{CC} = 3.3V$, $V_I = 0V$ or V_{CC}	8	pF
C_{PD}	Power Dissipation Capacitance	$V_{CC} = 3.3V$, $V_I = 0V$ or V_{CC}, f = 10 MHz	25	pF

AC LOADING and WAVEFORMS Generic for LCX Family

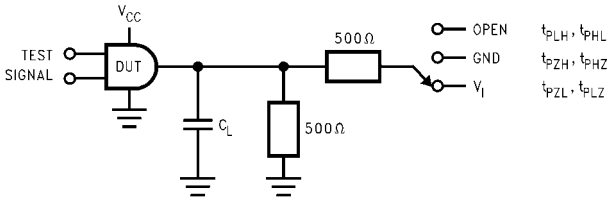

FIGURE 1. AC Test Circuit (C_L includes probe and jig capacitance)

Test	Switch
t_{PLH}, t_{PHL}	Open
t_{PZL}, t_{PLZ}	6V at V_{CC} = 3.3 ± 0.3V V_{CC} x 2 at V_{CC} = 2.5 ± 0.2V
t_{PZH}, t_{PHZ}	GND

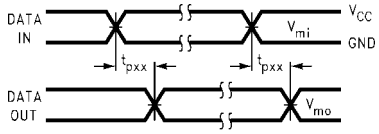

Waveform for Inverting and Non-Inverting Functions

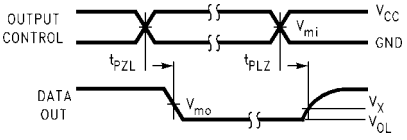

3-STATE Output Low Enable and Disable Times for Logic

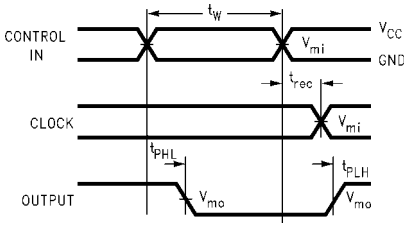

Propagation Delay. Pulse Width and t_{rec} Waveforms

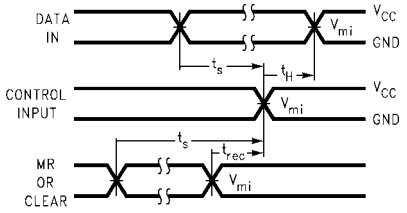

Setup Time, Hold Time and Recovery Time for Logic

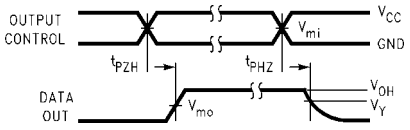

3-STATE Output High Enable and Disable Times for Logic

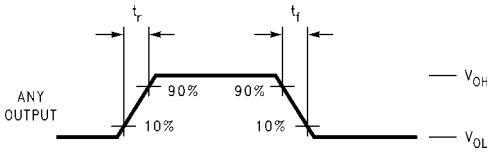

t_{rise} and t_{fall}

FIGURE 2. Waveforms
(Input Characteristics; f =1MHz, t_r = t_f = 3ns)

Symbol	V_{CC}		
	3.3V ± 0.3V	**2.7V**	**2.5V ± 0.2V**
V_{mi}	1.5V	1.5V	V_{CC}/2
V_{mo}	1.5V	1.5V	V_{CC}/2
V_x	V_{OL} + 0.3V	V_{OL} + 0.3V	V_{OL} + 0.15V
V_y	V_{OH} − 0.3V	V_{OH} − 0.3V	V_{OH} − 0.15V

Schematic Diagram Generic for LCX Family

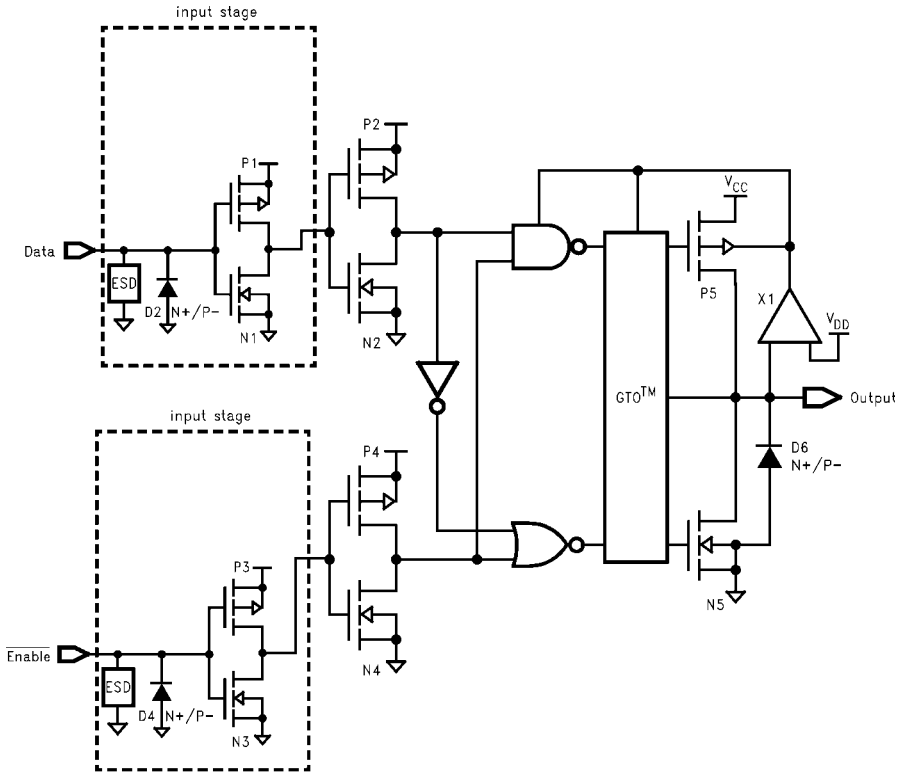

Physical Dimensions inches (millimeters) unless otherwise noted

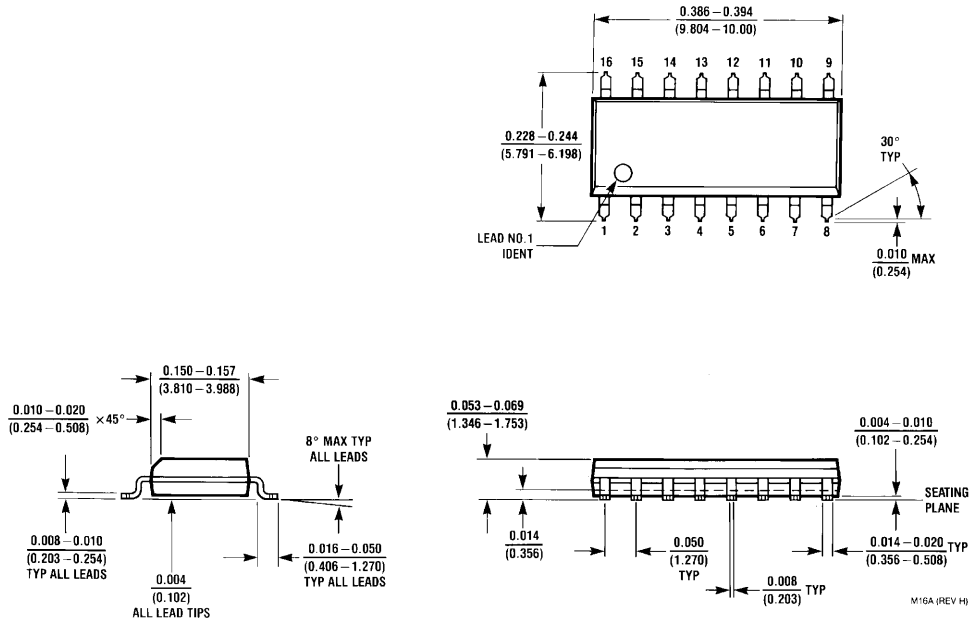

16-Lead Small Outline Integrated Circuit (SOIC), JEDEC MS-012, 0.150 Narrow
Package Number M16A

Physical Dimensions inches (millimeters) unless otherwise noted (Continued)

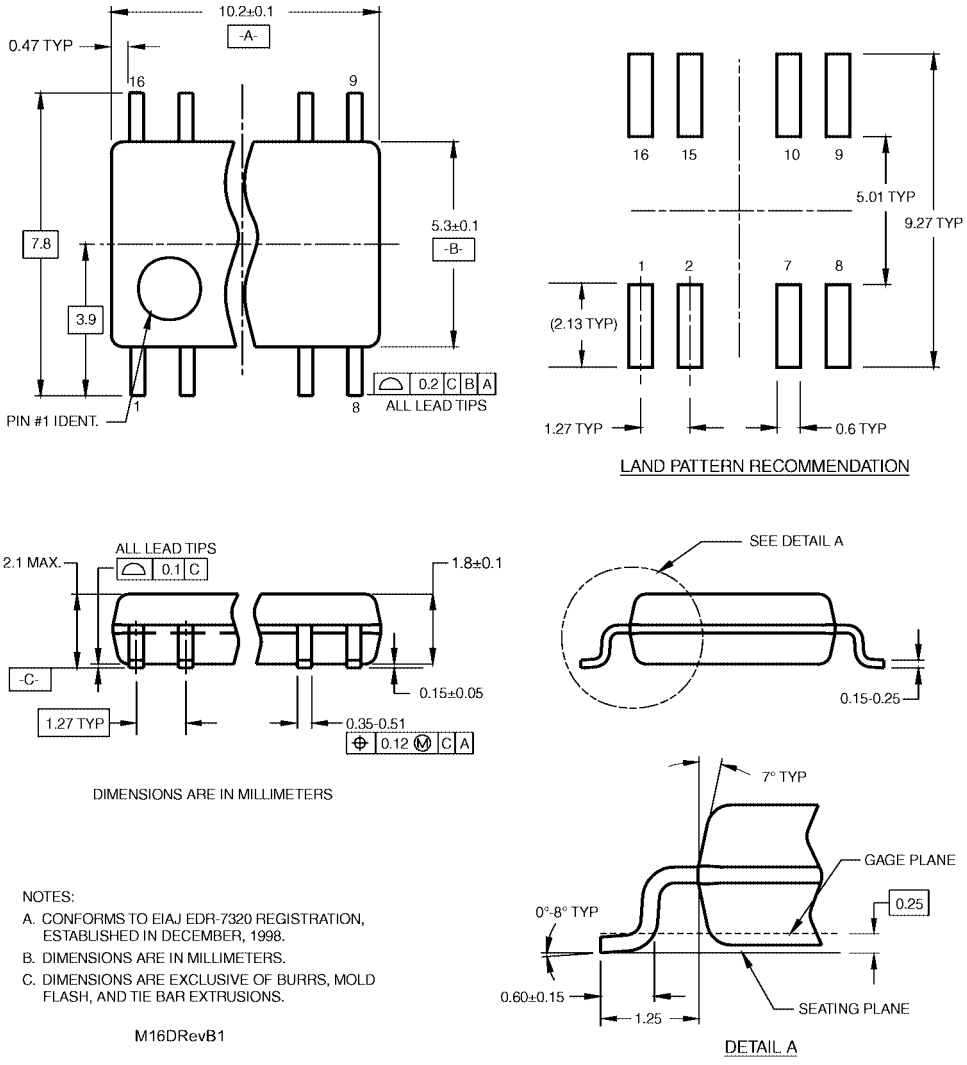

NOTES:

A. CONFORMS TO EIAJ EDR-7320 REGISTRATION, ESTABLISHED IN DECEMBER, 1998.

B. DIMENSIONS ARE IN MILLIMETERS.

C. DIMENSIONS ARE EXCLUSIVE OF BURRS, MOLD FLASH, AND TIE BAR EXTRUSIONS.

M16DRevB1

16-Lead Small Outline Package (SOP), EIAJ TYPE II, 5.3mm Wide
Package Number M16D

Physical Dimensions inches (millimeters) unless otherwise noted (Continued)

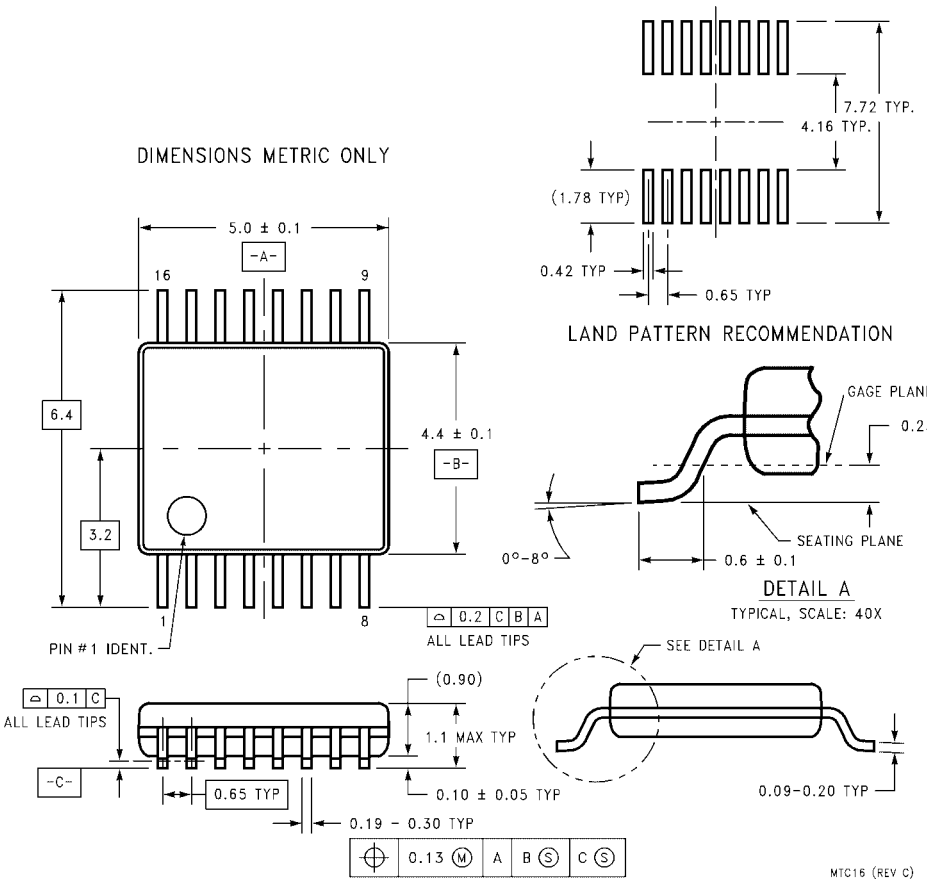

16-Lead Thin Shrink Small Outline Package (TSSOP), JEDEC MO-153, 4.4mm Wide
Package Number MTC16

Fairchild does not assume any responsibility for use of any circuitry described, no circuit patent licenses are implied and Fairchild reserves the right at any time without notice to change said circuitry and specifications.

LIFE SUPPORT POLICY

FAIRCHILD'S PRODUCTS ARE NOT AUTHORIZED FOR USE AS CRITICAL COMPONENTS IN LIFE SUPPORT DEVICES OR SYSTEMS WITHOUT THE EXPRESS WRITTEN APPROVAL OF THE PRESIDENT OF FAIRCHILD SEMICONDUCTOR CORPORATION. As used herein:

1. Life support devices or systems are devices or systems which, (a) are intended for surgical implant into the body, or (b) support or sustain life, and (c) whose failure to perform when properly used in accordance with instructions for use provided in the labeling, can be reasonably expected to result in a significant injury to the user.
2. A critical component in any component of a life support device or system whose failure to perform can be reasonably expected to cause the failure of the life support device or system, or to affect its safety or effectiveness.

www.fairchildsemi.com